FLOWDÉCOR

4496 Gianna Table Lamp

DESCRIPTION: metal, antique brass finish

HEIGHT: 29″

SHADE: off-white linen; oval;
16.5″W(t) x 11″D(t) x 18″W(b) x 12″D(b) x 10″H

SHADE OPTIONS: white linen

SOCKET: E26, 3-way, max watt 150W
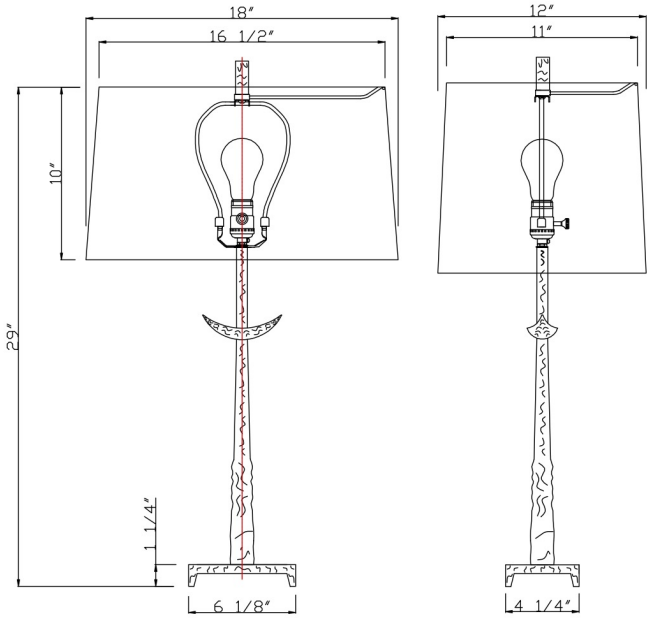
Weight: 10 lbs
Carton Base: 10 lbs, 27″ x 10″ x 9″
Carton Shade: 4 lbs, 20″ x 14″ x 13″