FLOWDÉCOR



3953 Wyatt Table Lamp

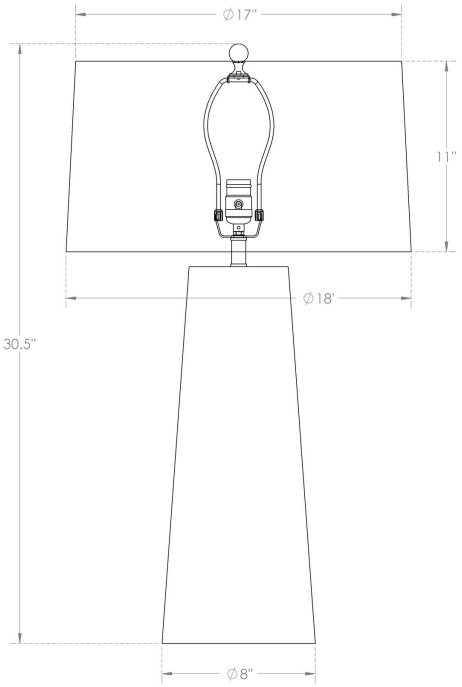

DESCRIPTION: glass, taupe finish

HEIGHT: 30.5"

SHADE: beige cotton; tapered drum;
17"ø(t) x 18"ø(b) x 11"H

SHADE OPTIONS: off-white linen, off-white cotton, beige linen, taupe cotton

SOCKET: E26, 3-way, max watt 150W

NOTE: handmade, finish may vary

Weight: 9 lbs
Carton Base: 12 lbs, 25" x 13" x 13"
Carton Shade: 5 lbs, 20" x 20" x 14"