FLOWDÉCOR



4638 Sanibel Table Lamp

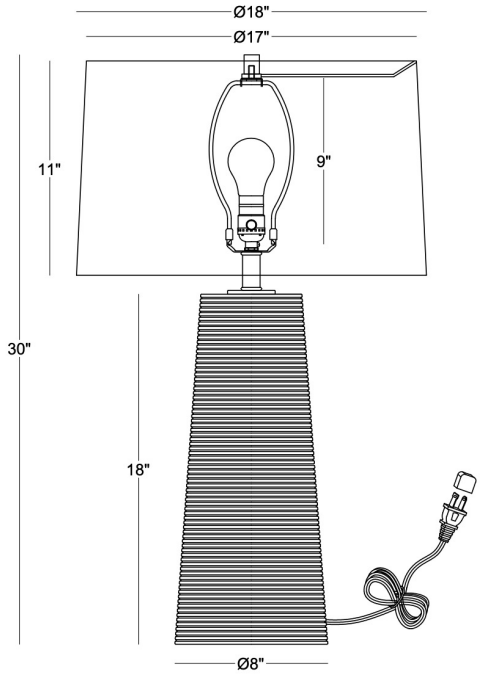

DESCRIPTION: wood, light finish

HEIGHT: 30"

SHADE: off-white linen; tapered drum;
17"ø(t) x 18"ø(b) x 11"H

SHADE OPTIONS: off-white cotton, beige linen,
beige cotton, taupe cotton

SOCKET: E26, 3-way, max watt 150W

Wood is an organic material with natural variations in grain, colouring, knots, and splits. Inconsistencies are inherent. Bases may contain more than one piece of solid wood; seams may be visible.

Weight: 19 lbs
Carton Base: 20 lbs, 26" x 12" x 11"
Carton Shade: 5 lbs, 20" x 20" x 14"