FLOWDÉCOR



4719 Romolo Table Lamp

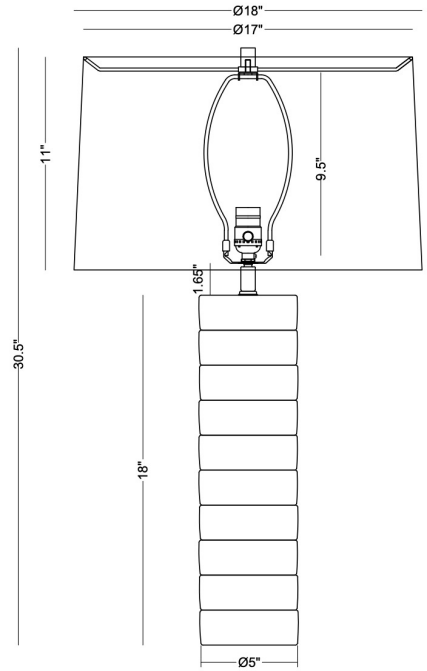

DESCRIPTION: ceramic, off-white finish

HEIGHT: 30.5"

SHADE: off-white linen; tapered drum;
17"ø(t) x 18"ø(b) x 11"H

SHADE OPTIONS: off-white cotton, beige linen, beige cotton, taupe cotton

SOCKET: E26, 3-way, max watt 150W

Each ceramic disc is individually handmade. The resulting tower of discs might not be on a perfect vertical angle, which is intended and part of the look. The socket swivels to easily accommodate variations in the angle of the base.

Weight: 11 lbs
Carton Base: 12 lbs, 26" x 9" x 10"
Carton Shade: 5 lbs, 20" x 20" x 14"