FLOWDÉCOR



4745 Rita Table Lamp

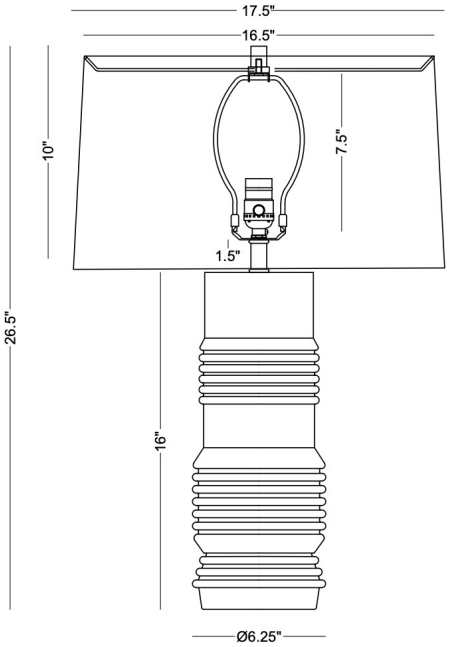

DESCRIPTION: wood, black stain finish

HEIGHT: 26.5"

SHADE: off-white linen; tapered drum;
16.5"ø(t) x 17.5"ø(b) x 10"H

SHADE OPTIONS: beige linen

SOCKET: E26, 3-way, max watt 150W

Wood is an organic material with natural variations in grain, colouring, knots, and splits. Inconsistencies are inherent. Bases may contain more than one piece of solid wood; seams may be visible.

Weight: 11 lbs
Carton Base: 11 lbs, 24" x 10" x 10"
Carton Shade: 5 lbs, 20" x 20" x 13"