FLOWDÉCOR



4774 Lettie Table Lamp

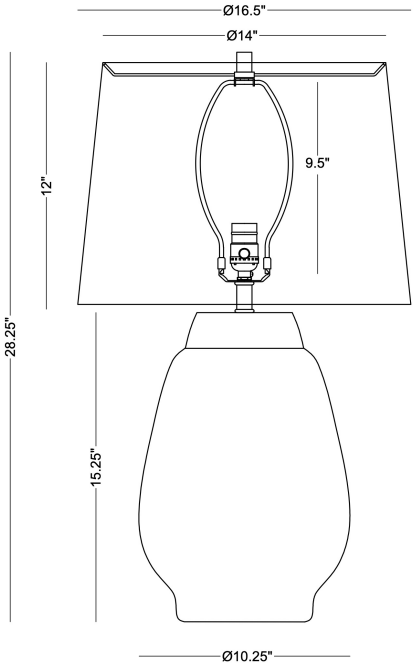

DESCRIPTION: handmade ceramic, black

HEIGHT: 28.25"

SHADE: off-white linen; tapered drum;
14"ø(t) x 16.5"ø(b) x 12"H

SOCKET: E26, 3-way, max watt 150W

NOTE: handmade, finish may vary

Weight: 15 lbs
Carton Base: 16 lbs, 24" x 13" x 13"
Carton Shade: 5 lbs, 18" x 18" x 15"