FLOWDÉCOR



6084 Keith Sconce

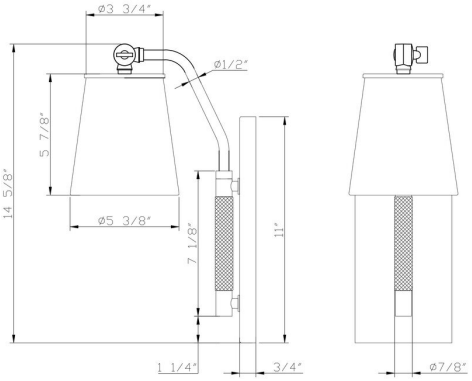

DESCRIPTION: metal, antique silver finish

DIMENSIONS: 14.625"H x 5.375"W x 9"D

Shade: tapered drum; 3.75"ø(t) x 5.375"ø(b) x 5.875"H
Fabric: off-white linen

Weight: 6 lbs
Carton: 11 lbs, 18" x 13" x 10"

