FLOWDÉCOR



4668 Jefferson Table Lamp

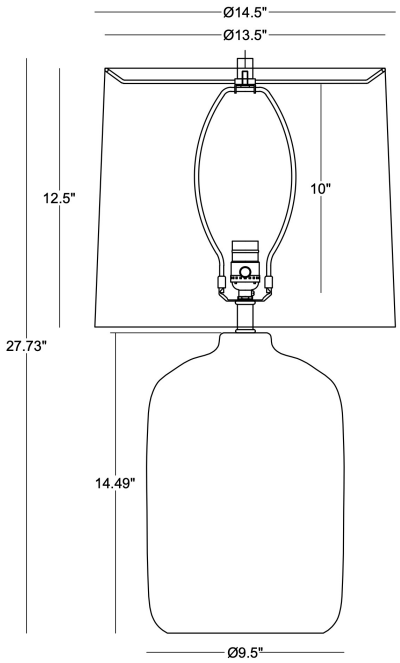

DESCRIPTION: handmade ceramic, cream finish

HEIGHT: 28"

SHADE: off-white linen; tapered drum;
13.5"ø(t) x 14.5"ø(b) x 12.5"H

SHADE OPTIONS: off-white cotton

SOCKET: E26, 3-way, max watt 150W

Weight: 13 lbs
Carton Base: 14 lbs, 23" x 14" x 14"
Carton Shade: 4 lbs, 17" x 17" x 15"