FLOWDÉCOR



4746 Jasper Table Lamp

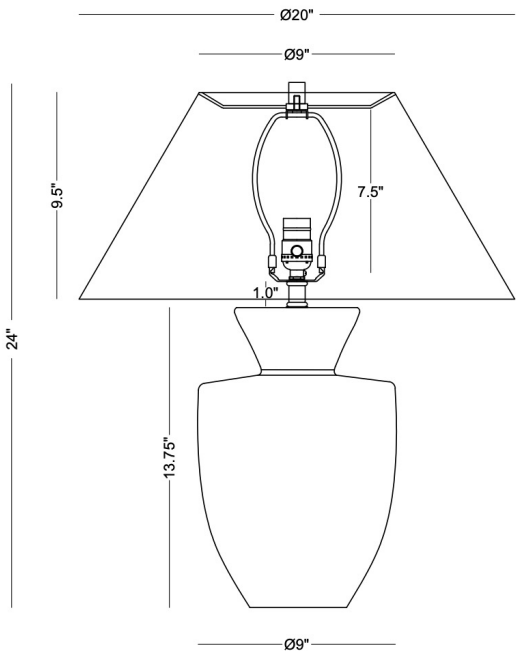

DESCRIPTION: handmade ceramic, brown

HEIGHT: 24"

SHADE: off-white linen; tapered drum;
9"ø(t) x 20"ø(b) x 9.5"H

SHADE OPTIONS: beige linen

SOCKET: E26, 3-way, max watt 150W
Carton Base: 18 lbs, 22" x 13" x 13"
Carton Shade: 5 lbs, 22" x 22" x 12"