FLOWDÉCOR



4704 Genoa Table Lamp

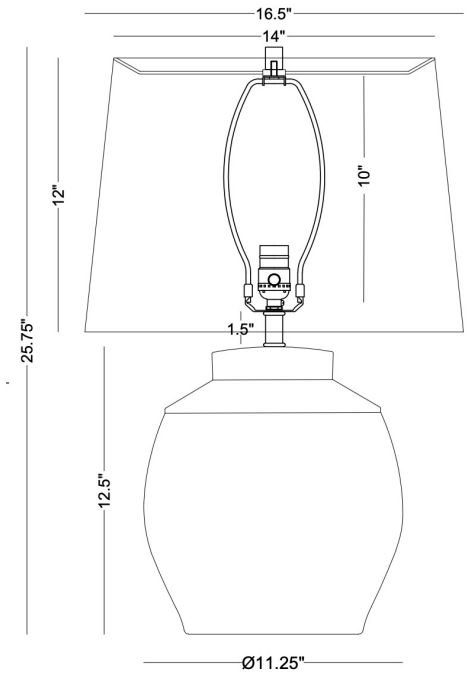

DESCRIPTION: ceramic, off-white light sheen finish with faint lines

HEIGHT: 25.75"

SHADE: off-white linen; tapered drum;
14"ø(t) x 16.5"ø(b) x 12"H

SOCKET: E26, 3-way, max watt 150W

Weight: 13 lbs
Carton Base: 14 lbs, 21" x 16" x 16"
Carton Shade: 5 lbs, 18" x 18" x 15"