FLOWDÉCOR



4564 Audrey Table Lamp

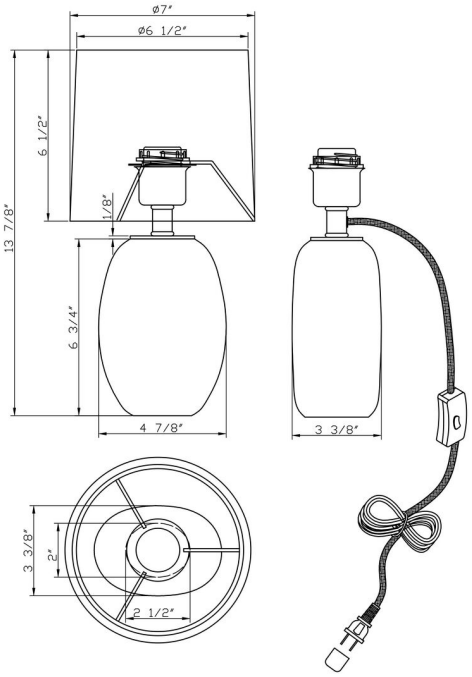

DESCRIPTION: glass, blue

HEIGHT: 14"

SHADE: off-white linen; tapered drum;
6.5"ø(t) x 7"ø(b) x 6.5"H

SOCKET: E26, 1-way, max watt 60W

NOTE: cloth cord comes out of socket, on/off switch on cord

Weight: 7 lbs
Carton Base: 7 lbs, 13" x 8" x 7"
Carton Shade: 2 lbs, 8" x 7" x 7"