FLOWDÉCOR

4767 Miriam Table Lamp

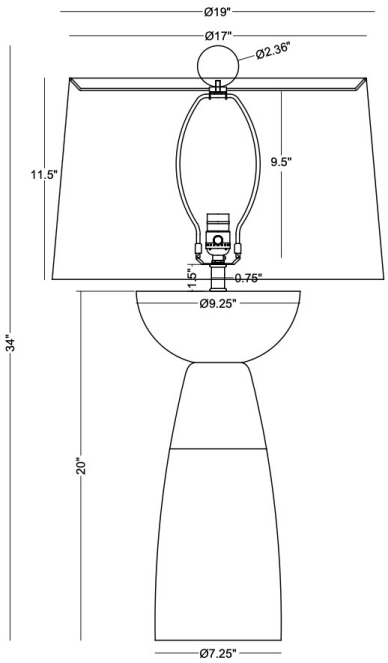

DESCRIPTION: wood, light finish

HEIGHT: 34″

SHADE: off-white linen; tapered drum;
17″ø(t) x 19″ø(b) x 11.5″H

SOCKET: E26, 3-way, max watt 150W

Wood is an organic material with natural variations in grain, colouring, knots, and splits. Inconsistencies are inherent. Bases may contain more than one piece of solid wood; seams may be visible.

Weight: 19 lbs
Carton Base: 20 lbs, 28″ x 13″ x 14″
Carton Shade: 6 lbs, 21″ x 21″ x 14″