FLOWDÉCOR

3951 - Penelope Table Lamp

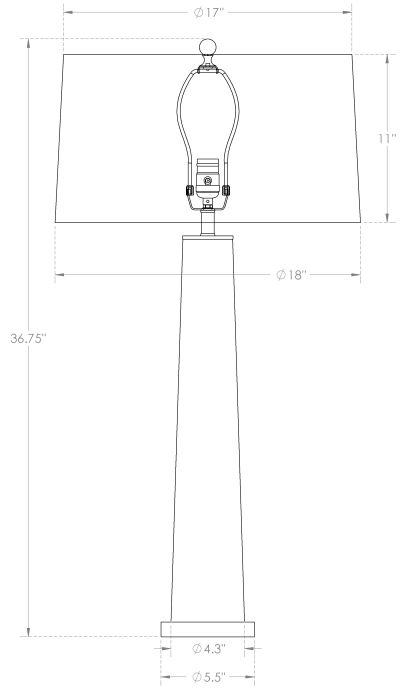

DESCRIPTION: mouth-blown glass, brown finish; acrylic base

HEIGHT: 36.75"

SHADE: off-white linen; tapered drum; 17"ø(t) x 18"ø(b) x 11"H

BULB: E26, 3-way, max watt 150W

SHADE OPTIONS: beige linen, beige cotton, taupe cotton, oval off-white linen

NOTE: handmade, finish may vary

Weight: 7 lbs
Carton Base: 10 lbs, 31" x 11" x 11"
Carton Shade: 6 lbs, 20" x 20" x 14"